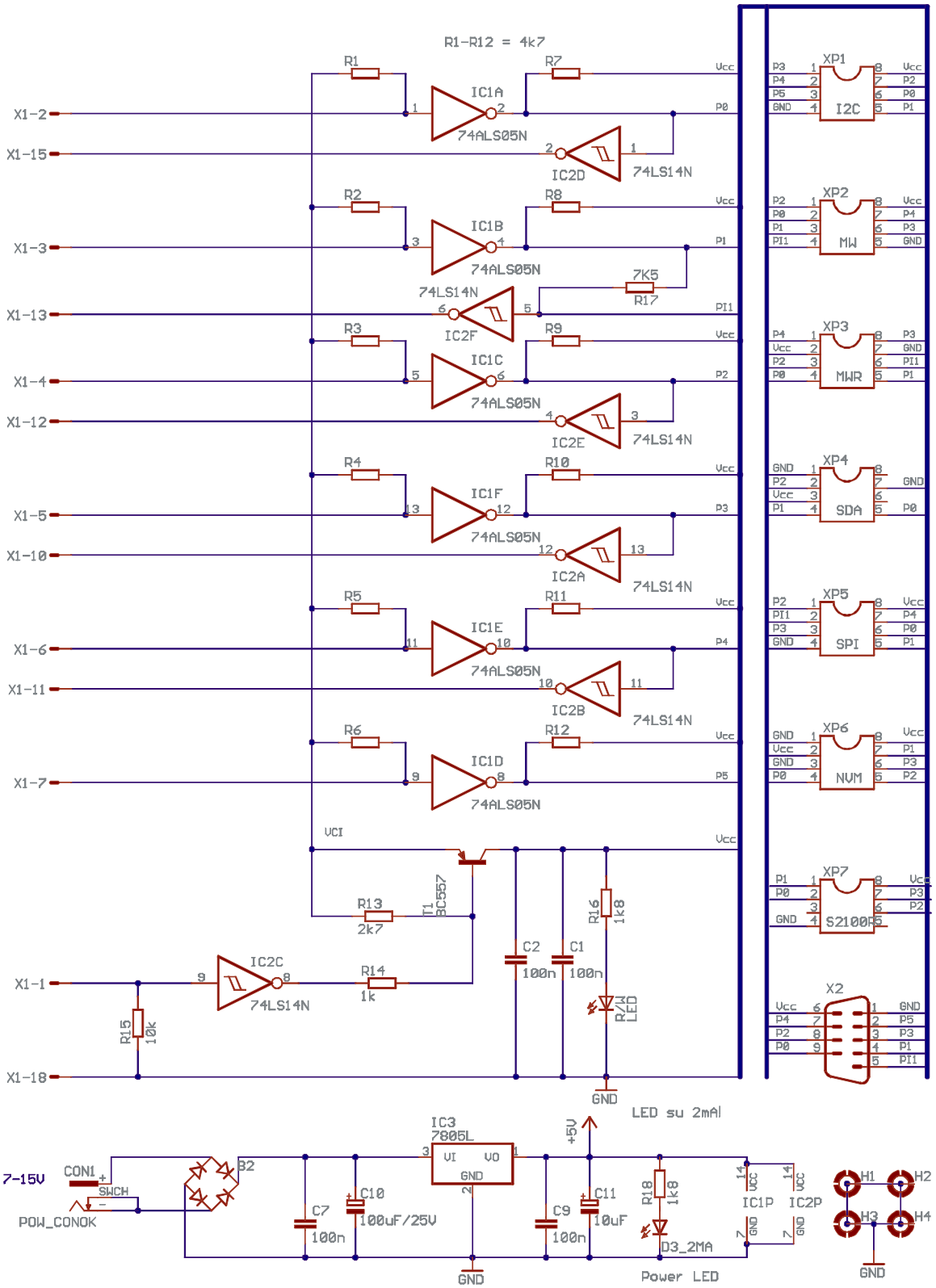
R1-R12 = 4k7
X1-2
X1-15
X1-3
X1-13
X1-4
X1-12
X1-5
X1-10
X1-6
X1-11
X1-7
X1-1
X1-18
IC1A
IC1B
IC1C
IC1D
IC1E
IC1F
74ALS05N
IC2A
IC2B
IC2C
IC2D
IC2E
IC2F
74LS14N
7K5
R17
R13
2k7
T1
BC557
R14
1k
R15
10k
C2
100n
C1
100n
R16
1k8
R/W LED
GND
LED su 2mA!
XP1
I2C
XP2
MW
XP3
MWR
XP4
SDA
XP5
SPI
XP6
NVM
XP7
S2100R
X2
IC3
7805L
VI
VO
+5V
7-15V
CON1
SWCH
POW_CONOK
B2
C7
100n
C10
100uF/25V
C9
100n
C11
10uF
R18
1k8
D3_2MA
Power LED
IC1P
IC2P
H1
H2
H3
H4

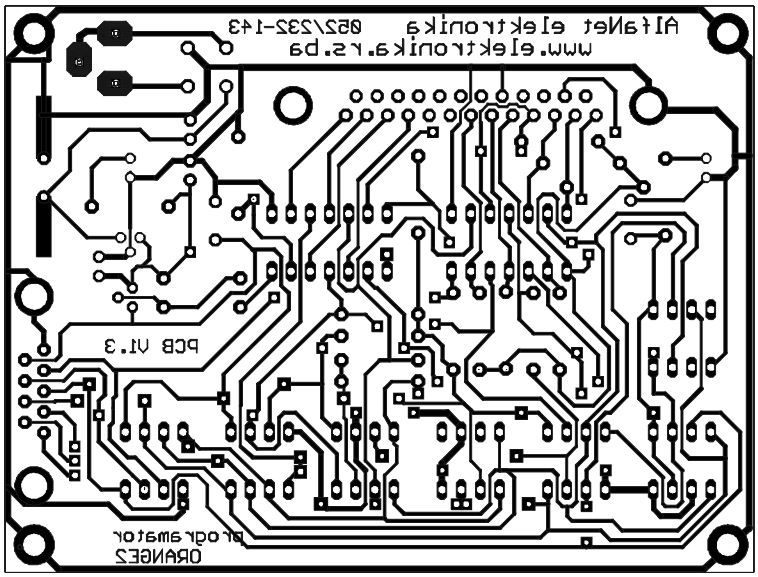
ORANGE2
programator
PCB V1.3
AlfaNet elektronika 052\232-143
www.elektronika.rs.ba

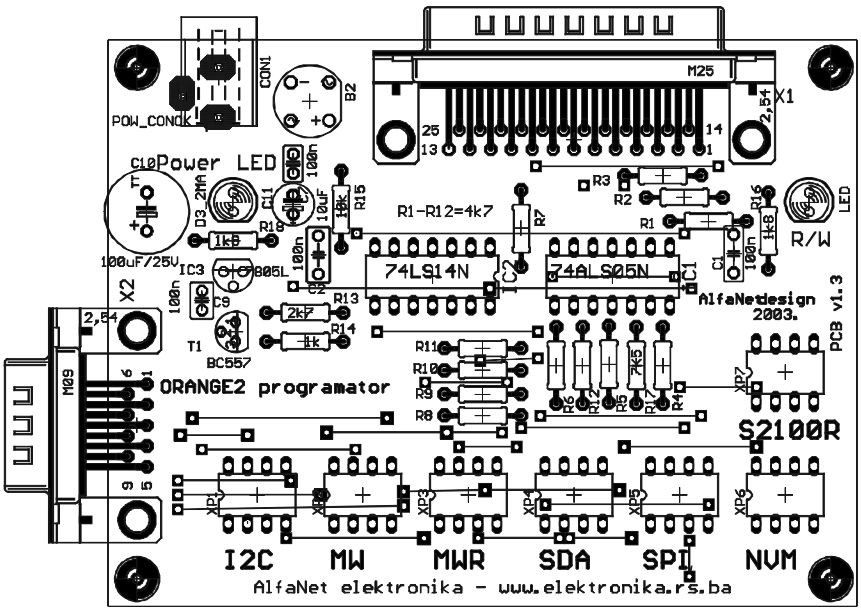
POW_CONN
CON1
B2
M25
X1
2,54
Power LED
C10
100uF/25V
D3 2MA
C11
100n
10uF
R15
10k
R18
1k8
IC3
7805L
C9
R13
2k7
R14
1k
T1
BC557
R1-R12=4k7
R7
R3
R2
R1
R16
1k8
LED
R/W
74LS14N
IC2
74ALS05N
IC1
C1
AlfaNetdesign
2003.
PCB v1.3
X2
M09
ORANGE2 programator
R11
R10
R9
R8
7k5
XP7
S2100R
XP1
XP2
XP3
XP4
XP5
XP6
I2C
MW
MWR
SDA
SPI
NVM
AlfaNet elektronika - www.elektronika.rs.ba

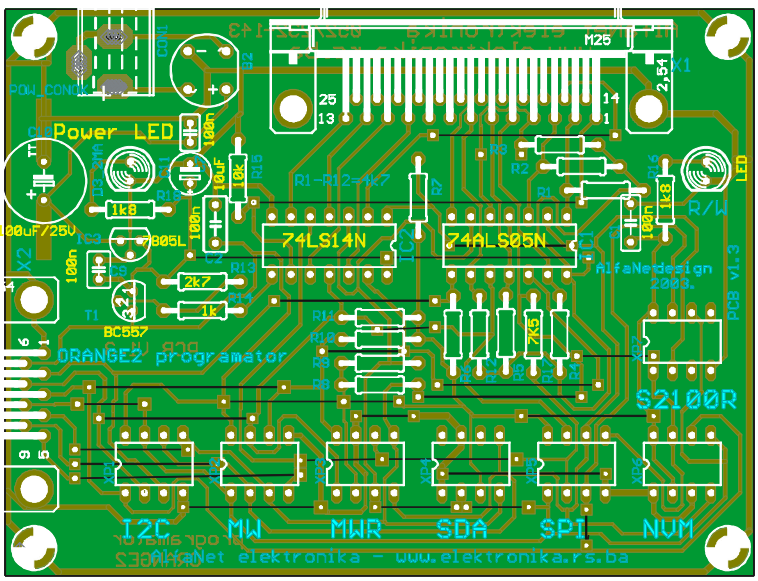
M25
X1
Power LED
100uF/25V
74LS14N
74ALS05N
R/W
LED
AlfaNetdesign
2003.
PCB v1.3
X2
BC557
ORANGE2 programator
S2100R
I2C
MW
MWR
SDA
SPI
NVM
AlfaNet elektronika - www.elektronika.rs.ba